USB to High-Speed Serial Chip CH343

Datasheet

Version: 2.0

https://wch-ic.com

1. Introduction

CH343 is a USB bus converter chip, which converts USB to high-speed serial UART interface, provides common MODEM signal, to expand serial UART interface of computer or upgrade common serial devices or MCU to USB bus directly.

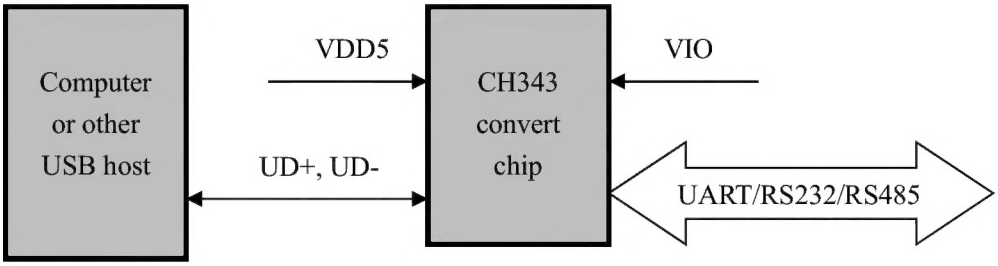

2. Features

- Full-speed USB device interface, USB 2.0 compatible.
- Built-in firmware, emulate standard UART interface, used to upgrade the original serial peripherals or expand additional serial UART via USB.
- Original serial applications are totally compatible without any modification.
- Support free installation OS which built-in CDC driver or multifunctional high-speed VCP vendor driver.
- Hardware full-duplex serial UART interface, integrated independent transmit-receive buffer, supports communication baud rate varies from 50bps to 6Mbps.
- Support 5, 6, 7 or 8 data bits, supports odd, even, space, mark and no parity.
- Support common MODEM interface signals RTS, DTR, DCD, RI, DSR and CTS.
- Support CTS and RTS hardware automatic flow control.
- Support half-duplex, provides sending status TNOW which support RS485 to switch.
- Support RS232 interface, through external voltage conversion chip.
- Support USB port 5V and 3.3V power supply.
- I/O independent power supply, supports 5V, 3.3V, 2.5V and 1.8V power supply, supports backflow prevention.
- Integrated power-on reset, integrated 12MHz clock, no external crystal required.
- CH343P integrates EEPROM used to configure the chip of VID, PID, maximum current value, vendor and product information string, etc.
- Chip has integrated Unique ID (USB Serial Number).
- RoHS compliant SOP16, ESSOP10 and QFN16 lead-free package.

3. Packages

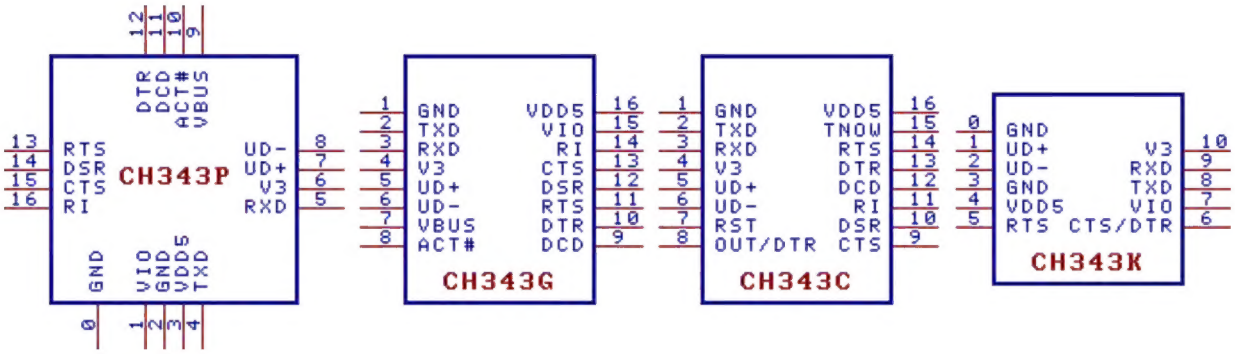

Package	Body Size		Pin Pitch		Package Description	Order Model
QFN16_3X3	3*3mm		0.5mm	19.7mil	Quad Flat No-lead Package	CH343P
SOP16	3.9mm	150mil	1.27mm	50mil	Small Outline Package	CH343G
SOP16	3.9mm	150mil	1.27mm	50mil	Small Outline Package	CH343C
ESSOP10	3.9mm	150mil	1.00mm	39mil	EPAD Shrink Small-Outline Package	CH343K

Note: The EPAD of the CH343P/CH343K is 0# pin GND, which is an optional but recommended connection; other GND are necessary connections.
USB transceiver of CH344 is designed in accordance with the USB2.0 full built-in design, UD+ and UD- pin cannot connect with resistor in serial, otherwise it will affect the signal quality.

4. Pinouts

Pin No.				Pin name	Type	Pin description
343P	343G	343C	343K			
3	16	16	4	VDD5	Power	The positive power input of the power regulator requires an external decoupling capacitor. The VIO power supply of CH343C has been shorted to VDD5 inside the chip.
1	15	-	7	VIO	Power	I/O port power input terminal requires external decoupling capacitor
2,0	1	1	3,0	GND	Power	Common ground terminal, need to connect to the ground wire of the USB bus
6	4	4	10	V3	Power	Internal power regulator output, core and USB power input, connect to VDD5 input external power supply when VDD5 voltage is less than 3.6V, and external decoupling capacitor when VDD5 voltage is greater than 3.6V
-	-	7	-	RST	Input	External reset input, active low level, built-in pull-up resistor
7	5	5	1	UD+	USB signal	D+ data line directly connected to USB bus, no additional resistors can be connected in series.
8	6	6	2	UD-	USB signal	D- data line directly connected to USB bus, no additional resistors can be connected in series.
9	7	-	-	VBUS	Input	VBUS status detection input of USB bus, built-in pull-down resistor
4	2	2	8	TXD	Output	Serial data output of the serial port, idle state is high
5	3	3	9	RXD	Input	Serial data input of serial port, built-in pull-up resistor
15	13	9	-	CTS	Input	MODEM contact input signal, clear transmit, active low
-	-	-	6	CTS or DTR	Default input automatically converted to output	The default is MODEM contact input signal, clear transmit, active low When the computer software sets DTR to be valid, it will automatically switch to MODEM contact output signal, the data terminal is ready, active low
14	12	10	-	DSR	Input	MODEM contact input signal, data device ready, active low
16	14	11	-	RI	Input	MODEM contact input signal, ringing indication, active low
11	9	12	-	DCD	Input	MODEM contact input signal, carrier detection, active low
12	10	-	-	DTR	Output	MODEM contact output signal, data terminal

				TNOW		ready, active low During power-on, if an external pull-down resistor is detected, switch to the serial port to send an ongoing status indication, and the high level is valid.
-	-	13	-	DTR	Output	MODEM contact output signal, data terminal ready, active low
13	11	14	5	RTS	Output	MODEM contact output signal, request to transmit, active low
-	-	15	-	TNOW	Output	Serial port transmits ongoing status indication, active high
-	-	8	-	OUT DTR	Output	MODEM universal output signal, software defined, active low Optionally switch to the second DTR signal
10	8	-	-	ACT#	Output	USB configuration complete status output, active low, invalid when suspended

5. Function Descriptions

5.1. Internal Structure

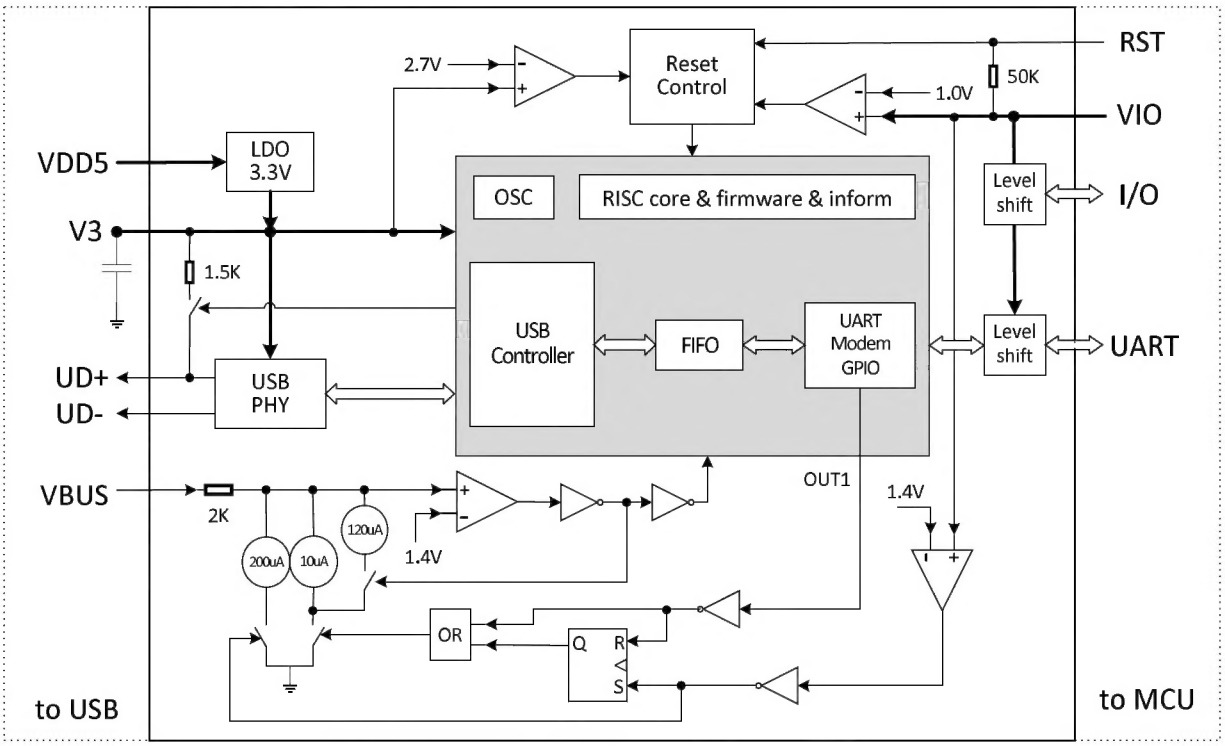

5.2. Power and Power Consumption

CH343 has 3 power supplies, built-in power regulator that generates 3.3V. VDD5 is the input of power regulator, V3 is the output of power regulator and USB transceiver and core power supply input, and VIO is the I/O pin power supply.

CH343 supports 5V or 3.3V supply voltage, the V3 pin should be connected to an external power decoupling capacitor of about 0.1uF. When using 5V power supply (more than 3.8V), VDD5 inputs external 5V power supply (for example, the USB bus power supply), the internal power regulator generates 3.3V on V3 which used by USB transceiver. When using 3.3V or lower operating voltage (less than 3.6V), V3 should be connected to VDD5, input external 3.3V power supply simultaneously. V3 still requires an external decoupling capacitor.

The VIO pin of CH343 is used to provide I/O power for I/O and RST pin and supports 1.8V~5V supply voltage. VIO/MCU and other peripherals should use the same power supply. UD+/UD- and VBUS pin use V3 power supply, not use VIO.

CH343 automatically supports USB device suspension to save power consumption. In the USB suspend state, if the I/O output pin has no external load, the I/O input pin is floating (internal pull-up) or in a high-level state, the VIO power supply will not consume current. In addition, when V3 and VDD5 lose power and are at 0V, the current consumption of VIO is the same as above, and VIO will not flow backwards current to VDD5 or V3.

VBUS should be connected to USB bus power supply, and when the loss of USB power is detected, CH343 will turn off the USB and sleep (suspend). CH343K/C has no VBUS pin, so assuming it always has been USB power, the integrated pull-down resistor of VBUS pin can be controlled by computer software which

setting OUT1 signal of MCR serial register (SERIAL_IOC_MCR_OUT1). Turning on the pull-down resistor When OUT1 is invalid (default status) or turn off it When OUT1 is valid.

CH343 provides VIO low-voltage protection mechanism when VBUS connects resistor in series to control VIO power through PMOS. During the shutdown of the VBUS pull-down resistor, if VIO voltage is lower than about 1.4V which is detected, then CH343 will automatically absorb about 300uA discharge current on VBUS, until the VIO voltage rises and the discharge current finished, starting the pull-down resistor automatically.

Several power connection schemes for reference here:

<table>
<tr><td rowspan="2">Power supply scheme</td><td rowspan="2">UART signals voltage
MCU operating voltage</td><td>VDD5</td><td>V3</td><td>VIO</td><td>MCU or peripheral power supply</td></tr>
<tr><td>Not less than V3 voltage</td><td>Rated around 3.3V</td><td colspan="2">Both use the same power supply, 1.8V~5V</td></tr>
<tr><td rowspan="4">All USB power supply</td><td>5V</td><td>USB powered 5V</td><td>Connects to capacitor only</td><td colspan="2">USB powered 5V</td></tr>
<tr><td>3.3V</td><td>USB powered 5V</td><td>Connects to capacitor</td><td colspan="2">V3 powered 3.3V, up to 10mA</td></tr>
<tr><td>3.3V</td><td colspan="4">USB powered 5V stepped down to 3.3V via external LDO power regulator, V3 connects to external capacitor</td></tr>
<tr><td>1.8V~4V</td><td>USB powered 5V</td><td>Connects to capacitor only</td><td colspan="2">USB powered, step-down via external LDO regulator</td></tr>
<tr><td>USB+ self-powered Dual power supply</td><td>1.8V~5V</td><td>USB powered 5V</td><td>Connects to capacitor only</td><td colspan="2">Self-powered 1.8V~5V (1.8V, 2.5V, 3.3V, 5V)</td></tr>
<tr><td rowspan="2">All self-powered</td><td>4V~5V</td><td>Self-powered 4V~5V</td><td>Connects to capacitor only</td><td colspan="2">Self-powered 4V~5V</td></tr>
<tr><td>1.8V~5V</td><td colspan="2">Self-powered, rated 3.3V, connects to external capacitor</td><td colspan="2">Self-powered 1.8V~5V</td></tr>
</table>

Recommended dual-power supply scheme, only VIO and MCU use the same power supply, low-current consumption. VIO current is only 2uA when USB suspend/sleep.

5.3. UART

The pins of CH343 chip in UART mode include: data transmission pin, MODEM contact signal pin and auxiliary pin.

The data transmission pins include TXD pin and RXD pin. When the serial input is idle, RXD should be high. When the serial output is idle, TXD is high.

The contact signal pins of MODEM include CTS pin, DSR pin, RI pin, DCD pin, DTR pin and RTS pin. All these MODEM contact signals are controlled by computer applications and their uses are defined.

The DTR pin of CH343 chip is used as the configuration input pin during power-on or reset, which can be externally connected with a pull-down resistor of 4.7KΩ (3~8KΩ) to generate a default low level, so that the serial port can enter the half-duplex mode, and the original DTR pin is switched to the TNOW output pin to indicate that the serial port is sending data. In half-duplex mode, TNOW can be used to directly control the transceiver switching of RS485.

The CTS/DTR pin of CH343K chip will automatically switch from CTS to DTR when the DTR set by the computer software is valid (the default idle state is high), and it will remain as DTR output until the chip is powered on again or reset. The DTR does not support half-duplex mode input.

Auxiliary pins include: ACT# pin. The ACT# pin is the output of USB device configuration completion status, which can be used to inform MCU or drive a light-emitting diode connected to VIO after a current-limiting resistor is connected in series.

The UART of CH343 supports hardware automatic flow control of CTS and RTS, which can be enabled by software. If enabled, the serial port will continue to send the next data only when the CTS pin input is detected to be valid (active low), otherwise the serial port transmission will be suspended; When the receiving buffer is empty, the serial port will automatically activate the RTS pin (active low). When the data in the receiving buffer is full, the serial port will automatically deactivate the RTS pin and activate the RTS pin again when the buffer is empty. Using hardware automatic rate control, you can connect your own CTS pin to the other party's RTS pin and send your own RTS pin to the other party's CTS pin.

CH343 has built-in independent transceiver buffer, which supports simplex, half-duplex or full-duplex asynchronous serial communication. Serial data includes 1 low-level start bit, 5, 6, 7 or 8 data bits, and 1 or 2 high-level stop bits, and supports odd check/even check/flag check/blank check. CH343 supports regular toll rates: 50, 75, 100, 110, 134.5, 150, 300, 600, 900, 1200, 1800, 2400, 3600, 4800, 9600, 14400, 19200, 28800, 33600, 38400, 56000, 57600, 76800, 115200, 128000, 153600, 230400, 256000, 307200, 460800, 921600, 1M, 1.5M, 2M, 3M, 4M, 6M, etc. Supercharged 2Mbps applications are available for 480Mbps high-speed USB cores such as CH346, CH347, CH9111, etc.

In the application of high communication baud rate, it is suggested to enable hardware automatic flow control. Full-speed USB is only 12Mbps. Considering the protocol overhead and other factors, the serial port should be prevented from being in a continuous or full-duplex high-speed communication state of 3Mbps or above in practical application.

The allowable baud rate error of CH343 serial port receiving signal is not more than 4%, and the baud rate error of serial port sending signal is less than 1.6%.

Under the computer-side Windows operating system, CH343 supports the CDC class drivers that come with the system, and can also install high-speed VCP vendor drivers, which can simulate the standard serial port, so most serial port applications are completely compatible and usually do not need any modification.

CH343 can be used to upgrade the original serial peripheral equipment, or to add additional serial ports to the computer through USB bus. By adding level shifting devices, interfaces such as RS232, RS485 and RS422 can be further provided.

5.4. Clock, Reset and Others

CH343 has a built-in USB pull-up resistor, and the UD+ and UD- pins should be directly connected to the USB bus.

CH343 has built-in power-on reset circuit and low-voltage reset circuit. It also monitors the voltage of the V3 pin and the VIO pin. When the voltage V3 is lower than VRV3 or the VIO is lower than VRVIO, the chip will automatically reset hardware.

CH343 has built-in clock generator, without external crystal and oscillation capacitor.

5.5. DTR and Multi-mode MCU Download

For CH343C chip, pin 8# is OUT by default, with weak pull-up during power-up or reset, and OUT output of MODEM during normal operation, which can be controlled by the software on the computer side by setting the OUT1 signal in the MCR register of the serial port (SERIAL_IOC_MCR_OUT1). If pin 8# is connected to an external 4.7KΩ pull-down resistor, then it will enter the open-source DTR enhancement mode, and pin 8# is automatically switched to the open-source-driven second DTR for connecting to the BOOT mode pins of the MCU, and by default the second DTR is non-output and is held low by the external resistor, but it is possible for the application program to set this DTR pin to output high level or not for the default low level of the DTR for the multi-mode MCU downloads. In addition, the original DTR on pin 13# is used for multi-mode MCU download with DTR default high.

5.6. Parameter Configuration

In larger batch applications, the vendor VID and product identification PID of CH343 and product information can be customized.

In less batch applications, it can use CH343 that built-in EEPROM. After user installs VCP vendor driver, through configuration tool CH343xSerCfg.exe provided by chip manufacturer, it can be flexibly configured the vendor VID, product identification PID, maximum current, BCD version number, vendor information and product information string descriptor, etc.

6. Parameters

6.1. Absolute Maximum Ratings

(critical state or exceeding maximum can cause chip to not work or even be damaged)

Name	Parameter Description	Min.	Max.	Unit
TA	Operating Ambient Temperature	-40	85	℃
TS	Storage Temperature	-55	125	℃
VDD5	USB Supply Voltage(VDD5 connects to power, GND to ground)	-0.5	6.0	V
VIO	I/O Supply Voltage(VIO connects to power, GND to ground)	-0.5	6.0	V
VVBUS	VBUS Voltage	-0.5	6.5	V
VUSB	USB Signal Voltage	-0.5	V3+0.5	V
VUART	UART And Others Voltage	-0.5	VIO+0.5	V

6.2. Electrical Parameters

(Test conditions: TA=25℃,VDD5=5V or VDD5=V3=3.3V, VIO=1.8V~5V, exclude USB pin)

Name	Parameter Description		Min.	Typ.	Max.	Unit
VDD5	USB supply voltage	V3 doesn't connect to VDD5, V3 connected to capacitor	4.0	5	5.5	V
		V3 connected to VDD5, VDD5=V3	3.0	3.3	3.6	
VIO	Serial port and other I/O supply voltage		1.7	5	5.5	V
IVDD	Operating VDD5 or V3 supply current			3	15	mA
IVIO	Operating VIO supply current(depend on load)			0	(10)	mA
ISLP	Suspending USB supply current	VDD5 power supply =5V		0.09	0.16	mA
		VDD5=V3 power supply =3.3V		0.085	0.15	mA
		VIO power supply, no I/O load/pull up		0.002	0.05	mA
ILDO	External load capacity of internal power regulator				10	mA
VIL	Low-level input voltage	VIO=5V	0		1.5	V
		VIO=3.3V	0		0.9	V
		VIO=1.8V	0		0.5	V
VIH	High-level input voltage	VIO=5V	2.5		VIO	V
		VIO=3.3V	1.9		VIO	V
		VIO=1.8V	1.3		VIO	V

VIHVBS	VBUS high level voltage	VIO=1.8~5V	1.7		5.8	V
VOL	Output low voltage	VIO=5V, draw 15mA current		0.4	0.5	V
		VIO=3.3V, draw 8mA current		0.3	0.4	V
		VIO=1.8V, draw 3mA current		0.3	0.4	V
VOH	Output high voltage, not reset status	VIO=5V, output 10mA current	VIO-0.5	VIO-0.4		V
		VIO=3.3V, output 5mA current	VIO-0.4	VIO-0.3		V
		VIO=1.8V, output 2mA current	VIO-0.4	VIO-0.3		V
IPUP	Pull-up current of serial port and RST (pull-up to VIO voltage)	VIO=5V	35	150	220	uA
		VIO=3.3V	15	60	90	uA
		VIO=1.8V	3	14	21	uA
IPDN	Pull-down current of VBUS	VBUS>1.6V	6	10	16	uA
		VBUS<1.3V	50	140	200	uA
VRV3	V3 Power-on reset/low voltage reset voltage threshold		2.5	2.7	2.9	V
VRVIO	VIO power supply low voltage reset voltage threshold		0.8	1.0	1.15	V
VESD	HBM ESD tolerant voltage of USB or I/O		5	6		KV

6.3. Timing Parameters

(Test conditions: TA=25℃,VDD5=5V or VDD5=V3=3.3V, VIO=1.8V～5V)

Name	Parameter Description		Min.	Typ.	Max.	Unit
FD	Error of internal clock (influence baud rate comparatively)	TA=-15℃～60℃	-1.0	±0.5	+1.0	%
		TA=-40℃～85℃	-1.6	±0.8	+1.6	%
TRSTD	Reset delay after power on or external reset input		9	15	25	mS
TSUSP	Detect USB automatic suspend time		3	5	9	mS
TWAKE	Wake-up completion time after chip sleep		1.2	1.5	5	uS

7. Applications

7.1. USB to 9-wire TTL Converter Configuration

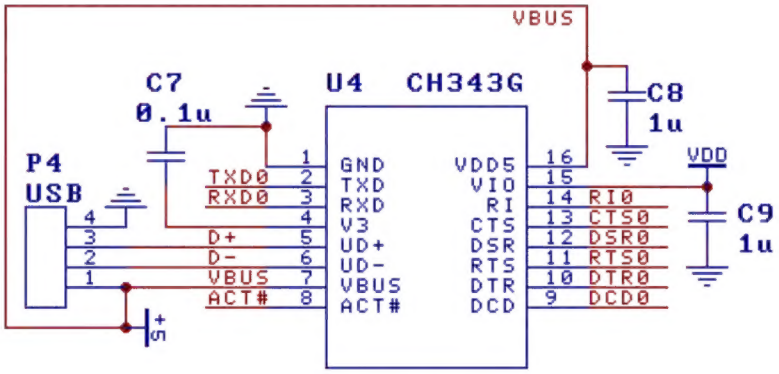

The image above is the USB to TTL converter realized by CH343G. The signal in the image can only be connected to RXD, TXD and public ground, while using the others as needed, all can be suspended when not needed.

P4 is a USB port, and the USB bus includes a pair of 5V power lines and a pair of data signal lines. Usually, the +5V power line is red, the grounding line is black, the D+ signal line is green, and the D- signal line is white. The power supply current provided by the USB bus can reach 500mA, and the VBUS pin detects the USB power supply status here.

Three power supply schemes: The first is all USB powered supply. CH343 chip and USB products directly use the 5V power supply provided by the USB bus, that is, VDD5=VBUS=USB 5V power, VIO=VMCU=USB 5V or 1.8V~4V after step-down; The second is separate and independent power supply. The VIO of CH343 and the MCU of the product use self- standing power VDD, while CH343 uses USB power, and VDD5 is connected to the USB power VBUS, that is, VDD5=VBUS=USB 5V power, VIO=VMCU=VDD=self- powered 1.8V~5V; The third is all self-powered, only detecting but not using USB power, USB product provides standing power VDD through self-powered mode, mainly contain two ways: VDD5=VIO=VMCU=VDD=self- powered 5V or VDD5=V3=VIO=VMCU=VDD=self-powered 3.3V.

The capacitance C7 of pin V3 is 0.1uF, which is used for decoupling the internal 3.3V power supply node of CH343, and C8 and C9 are used for decoupling the external power supply. It is suggested that VBUS should be added with 5.5V overvoltage protection device, or the capacity of C8 should be increased to 10uF.

When designing the PCB, pay attention to: decoupling capacitor C7, C8 and C9 get as close to the connected pins of CH343 as possible; Enabling the D+ and D- signal lines close to the parallel wiring, and providing ground or copper on both sides to reduce signal interference from the outside.

7.2. USB to RS232 Converter Configuration (9-wire)

CH343G provides common UART and MODEM signals, converts TTL to RS232 through external level shifting chip U2. P2 Port is DB9, the pins and functions are the same as common DB9 of PC. The chips similar with U2 have MAX213/ADM213/SP213/MAX211 etc. U2 uniformly powered by the USB bus through R4.

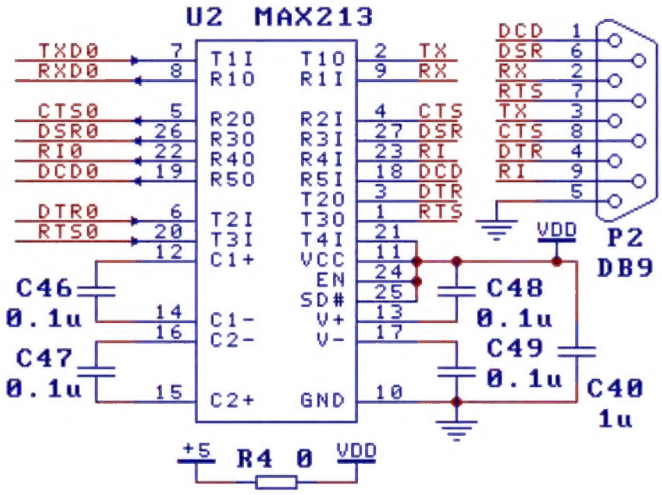

7.3. USB to RS485 Converter Configuration

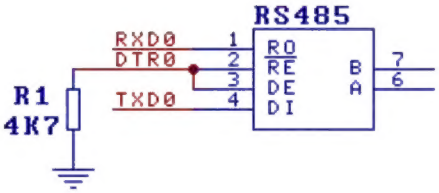

In the image, DTR connects to external pull-down resistor, therefore switching to TNOW which can be used to control DE (active high send enable) and RE# (active low receive enable) pin of RS485 transceiver.

7.4. Connect CH343 to MCU and Supply Power Separately

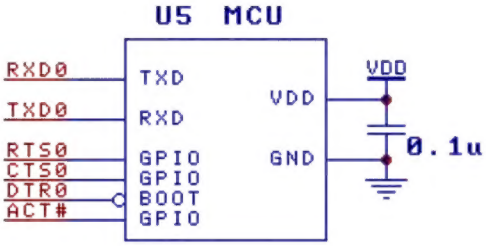

The image above shows the reference circuit that the MCU connect to CH343 through TTL to realize USB communication in dual power supply mode. VBUS is powered by CH343 through USB bus, the MCU and VIO use another self-powered VDD, which supports 5V, 3.3V or even 2.5V, 1.8V. When CH343 is connected with MCU, diode and other backflow prevention circuits can be omitted.

Excepting RXD and TXD, other pins are optional connections.

If the serial port speed is higher, the MCU can realize hardware flow control through CTS and RTS.
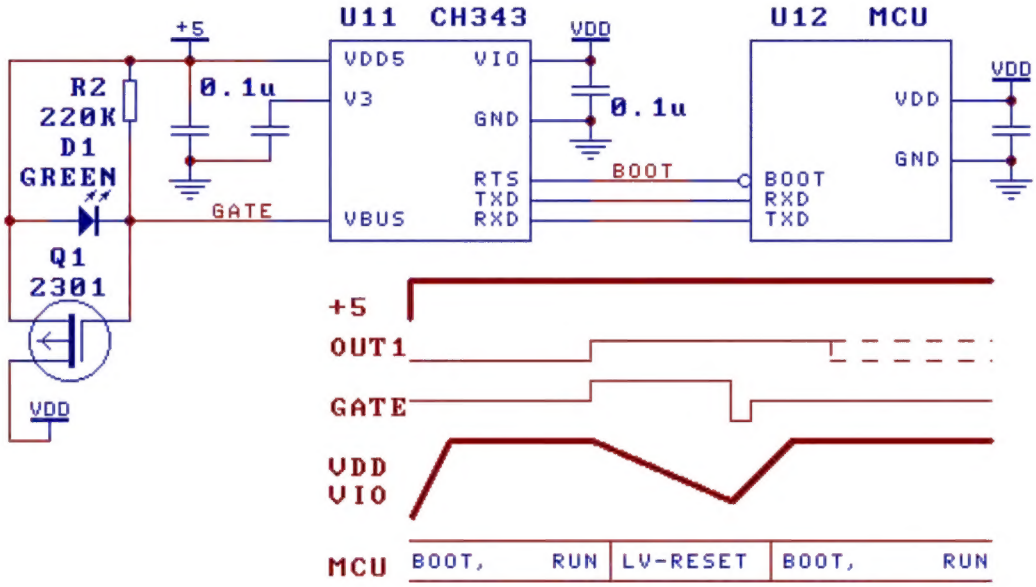
If needed, VBUS (OUT1) also used to control PMOS power switch that VBUS supplies power to MCU.As show below: +5 is USB power, VDD is VIO and MCU power of CH343. In default, the pull-down resistor of VBUS is turned on and generated a pull-down current, enabling the PMOS grid has enough voltage to turn on, and VBUS supplies power to VIO. After the computer software has set RTS and CTS, setting OUT1 is valid; then the pull-down resistor of VBUS is turned off, finally, the VIO drops voltage, which result MCU low voltage reset. When the VIO voltage drops to about 1.4V, low-voltage protection mechanism of VIO is triggered, VBUS automatically absorbs the pull-down current and regains the pull-down resistor, enabling PMOS is turned on again and resuming the supply power of the VIO. The whole process has achieved VIO step-down and MCU reset. The luminous tube D1 is used to prevent the VBUS voltage being too low. In addition, connecting a series diode between Q1 and VDD can prevent VDD from flowing back to+5.